SABER POWER®

Belt & Disc Sander

550W

Model: BDS6X9

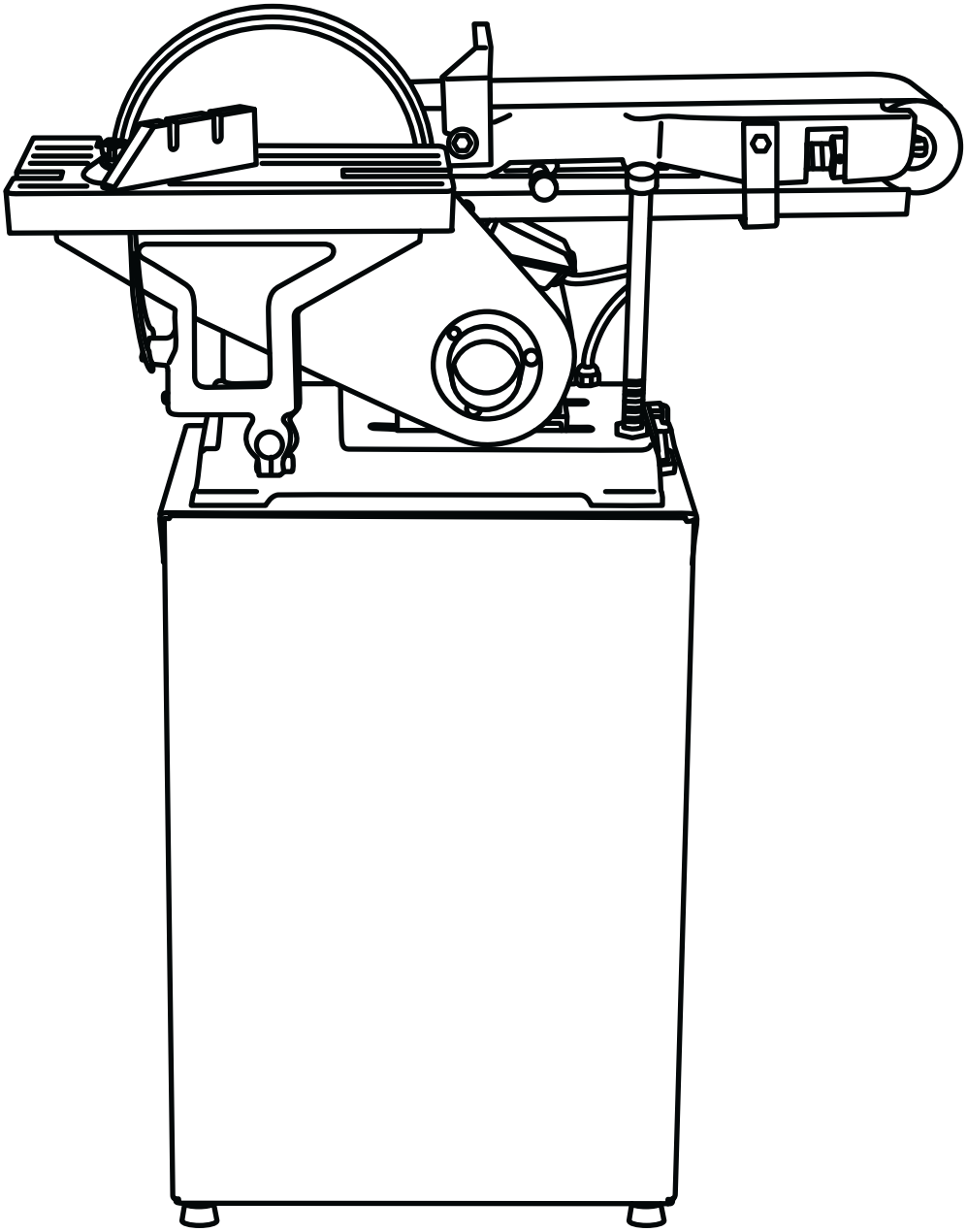

TO PREVENT SERIOUS INJURY, READ AND UNDERSTAND ALL WARNINGS AND INSTRUCTIONS BEFORE USE.

OPERATING INSTRUCTIONS

HAZARD DEFINITIONS AND WARNING SYMBOLS

This is the safety alert symbol. It is used to alert you to potential personal injury hazards. Obey all safety messages that follow this symbol to avoid possible injury or death.

DANGER indicates an imminently hazardous situation which, if not avoided, will result in death or serious injury.

WARNING indicates a potentially hazardous situation which, if not avoided, could result in death or serious injury.

CAUTION indicates a potentially hazardous situation which, if not avoided, may result in minor or moderate injury.

CAUTION used without the safety alert symbol indicates a potentially hazardous situation which, if not avoided, may result in property damage.

Warning Labels

Read the Instruction Manual. Before positioning, operating or adjusting the compressor, read the instruction manual.

Wear Dust Mask

Wear Safety Glasses

5490

Regulatory Compliance Mark

High Voltage

SABER POWER®

BELT & DISC SANDER

Rated power input	550W
Rated voltage	230V ~ 50Hz
Belt size	150 x 1219mm
Disc size	228mm
Work table tilt	0–90º
Belt table tilt	0–45º
Weight	49kg
Part number	BDS6X9
Batch number	
Serial number	

WARNING

AVOID CONTACT WITH MOVING BELT/DISC.

ALWAYS WEAR A DUST MASK AND SAFETY GLASSES WHEN OPERATING SANDER.

ALWAYS OPERATE SANDER WITH DUST EXTRACTOR ATTACHED.

5490

SABER POWER • Unit 5B, 730 Lorimer St, Port Melbourne VIC 3207. Made in China

General Safety Rules

WARNING "READ ALL INSTRUCTIONS" Failure to follow the safety rules listed below and other basic safety precautions may result in serious personal injury.

Work Area

KEEP CHILDREN AWAY
Do not let visitors contact tool or extension cord. All visitors should be kept safe distance from work area.

KEEP WORK AREAS CLEAN
Cluttered areas and benches invite accidents.

MAKE WORKSHOP KID-PROOF
With padlocks, master switches, or by removing starter keys.

AVOID DANGEROUS ENVIRONMENTS
Don't use power tools in damp or wet locations. Keep work area well lit. Do not expose power tools to rain. Do not use the tool in the presence of flammable liquids or gases.

Personal Safety

KNOW YOUR POWER TOOL
Read and understand the owner's manual and labels affixed to the tool. Learn its application and limitations as well as the specific potential hazards peculiar to this tool.

DON'T OVERREACH
Keep proper footing and balance at all times.

STAY ALERT
Watch what you are doing. Use common sense. Do not operate tool when you are tired. Do not operate while under medication or while using alcohol or other drugs.

WEAR PROPER APPAREL
Do not wear lose clothing, gloves, neckties, rings, bracelets, or other jewelry which may get caught in moving parts. Nonslip footwear is recommended. Wear protective hair covering to contain long hair.

ALWAYS USE SAFETY GLASSES
Also use face or dust mask if cutting operation is dusty, and ear plugs during extended periods of operation. Everyday eyeglasses have only impact resistant lenses, they are NOT safety glasses. GUARD AGAINST ELECTRIC SHOCK Prevent body contact with grounded surfaces. For example: pipes, radiators, ranges, refrigerator enclosures.

DISCONNECT TOOLS FROM POWER SOURCE
When not in use, before servicing, when changing blades, bits, cutters, etc.

KEEP GUARDS IN PLACE
In working order, and in proper adjustment and alignment.

REMOVE ADJUSTING KEYS AND WRENCHES
When not in use, before servicing, when changing blades, bits, cutters, etc.

REDUCE THE RISK OF UNINTENTIONAL STARTING
Make sure the switch is in the "OFF" position before plugging in tool.

GROUND ALL TOOLS
This tool is equipped with an approved 3-conductor cord and a 3 prong grounding type plug to fit the proper grounding type receptacle. The green conductor in the cord is the grounding wire. Never connect the green wire to a live terminal.

NEVER STAND ON TOOL OR ITS STAND
Serious injury could occur if the tool is tipped or if the cutting tool is accidentally contacted. Do not store materials on or near the tool such that it is necessary to stand on the tool or its stand to reach them.

CHECK DAMAGED PARTS
Before further use of the tool, a guard or other part that is damaged should be carefully checked to ensure that it will operate properly and perform its intended function. Check for alignment of moving parts, mounting, and any other conditions that may affect its operation. A guard or other part that is damaged should be properly replaced.

WARNING

All repairs, electrical or mechanical, should be attempted only by trained repairmen. Contact the nearest Total Tool Service Center, Authorized Service Station or other competent repair service.

WARNING

Use only Total Tools replacement parts; any others may create a hazard.

WARNING

The use of any other accessories not specified in the current Total Tool Catalogue, may create a hazard

SAVE THESE INSTRUCTIONS

Additional Safety Rules

Tool Use

DON'T FORCE TOOL
It will do the job better and safer at the rate for which it was designed.

USE THE RIGHT TOOL
Don't force a small tool or attachment to do the job of a heavy duty tool. Don't use tool for purpose not intended—for example, don't use a circular saw for cutting tree limbs or logs.

SECURE WORK
Use clamps or a vice to hold work. It's safer than using your hand and it frees both hands to operate the tool.

NEVER LEAVE TOOL RUNNING UNATTENDED
Turn power off. Don't leave tool until it comes to a complete stop.

Tool Care

DO NOT ALTER OR MISUSE TOOL
These tools are precision built. Any alteration or modification not specified is misuse and may result in dangerous conditions.

AVOID GASEOUS AREAS
Do not operate electric tools in a gaseous or explosive atmosphere. Motors in these tools normally spark, and may result in a dangerous condition.

MAINTAIN TOOLS WITH CARE
Keep tools sharp and clean for best and safest performance. Follow instructions for lubricating and changing accessories. Inspect tool cords periodically and if damaged, have repaired by authorized service facility. Inspect extension cords periodically and replace if damaged. Keep handles dry, clean and free from oil and grease.

⚠ WARNING

Before connecting the tool to a power source (receptacle, outlet, etc.), be sure voltage supplied is the same as that specified on the nameplate of the tool. A power source with a voltage greater than that specified for the tool can result in serious injury to the user, as well as damage to the tool. If in doubt, DO NOT PLUG IN THE TOOL. Using a power source with a voltage less than the nameplate rating is harmful to the motor .

For your own safety, do not operate your sander until it is completely assembled and installed according to the instructions … and until you have read and understood the following:

Safety Rules
Motor Specifications
Getting To Know Your Belt/Disc Sander.
Assembly and Adjustments
Maintaining Your Sander

STABILITY OF THE BELT/DISC SANDER
If there is any tendency of the belt/disc sander to tilt or move during any use, bolt it to the bench top or to a piece of 3/4" exterior plywood large enough to stabilize the sander. Bolt the plywood to the underside of the base so it extends beyond the sides of the base. DO NOT USE PRESSED WOODS PANELS. They can break unexpectedly. If the workpiece is too large to easily support with one hand, provide an auxiliary support.

LOCATION
Use the sander in a well-lit area and on a level surface, clean and smooth enough to reduce the risk of trips and falls. Use it where neither the operator nor the casual observer is forced to stand in line with a potential kickback.

PROTECTION: Eyes, hands, ears and body.

⚠ WARNING

TO AVOID BEING PULLED INTO THE SPINNING TOOL—

DO NOT WEAR: Loose fitting gloves
Necktie Loose clothing Jewellery

DO: TIE BACK LONG HAIR. ROLL LONG SLEEVES ABOVE ELBOWS

a. If any part of your belt/disc sander is missing, malfunctioning, has been damaged or broken … such as the motor switch, or other operating control, a safety device or the power cord … cease operating immediately until the particular part is properly repaired or replaced.

b. Never place your fingers in a position where they could contact the sand paper or other

cutting tool if the workpiece should unexpectedly shift or your hand should slip.
c. To prevent the workpiece from being torn from your hands, spinning on the table, shattering the tool, or being thrown, always support your work so it won't shift or bind on the tool.

d. Never move the table support while the tool is running.

e. Before starting the operation, jog the motor switch to make sure the sanding belt or other cutting tool does not wobble or cause vibration.

f. If a workpiece overhangs the table such that it will fall or tip if not held, provide auxiliary support.

g. Use fixtures for unusual operations to adequately hold, guide and position the workpiece.

h. Turn the motor switch "OFF" and unplug from power source when not in operation.

i. Always support workpiece with the mitre gage, backstop or worktable.

j. Keep fingers away from pinch points between the belt/disc and the housing.

k. Maintain 1/16" clearance maximum between table/stops and sanding belt or disc.

l. Maintain proper adjustment of sanding belt tension and alignment.

m. Avoid kickback (workpiece thrown at you) - Do not use right half of disc or work on left side of workpiece stop for belt.

n. To avoid injury from thrown work or tool contact, DO NOT perform layout, assembly, or setup work on the table while the tool is rotating.

o. Keep pulley cover closed when not making belt adjustments.
p. Do not expose to rain or use in damp locations.

q. Unplug the sander before making belt/wheel changes, adjustments or repairs.

11. DIRECTION OF FEED FOR DRUM SANDING

⚠ WARNING

Feed workpiece into a sanding drum or other approved accessory, against the direction of rotation.

12. THINK SAFETY
SAFETY IS A COMBINATION OF OPERATOR COMMON SENSE AND ALERTNESS AT ALL TIMES WHEN THE SANDER IS BEING USED.

⚠ WARNING

Do not allow familiarity (gained from frequent use of your sander) to become commonplace. Always remember that a careless fraction of a second is sufficient to inflict severe injury.

The operation of any power tool can result in foreign objects being thrown into the eyes, which can result in severe eye damage. Always wear safety goggles that comply with ANSI Z87.1 (shown on Package) before commencing power tool operation.

Some dust created by power sanding, sawing, grinding, drilling, and other construction activities contains chemicals known to cause cancer, birth defects or other reproductive harm. Some examples of these chemicals are:
• Lead from lead-based paints,
• Crystalline silica from bricks and cement and other masonry products, and
• Arsenic and chromium from chemically treated lumber.

Your risk from these exposures varies, depending on how often you do this type of work. To reduce your exposure to these chemicals: work in a well ventilated area, and work with approved safety equipment, such as those dust masks that are specially designed to filter out microscopic particles.

SAVE THESE INSTRUCTIONS

NOTE AND FOLLOW THE SAFETY WARNINGS AND INSTRUCTIONS THAT APPEAR ON THE PANEL OF THE SANDER

Safety Rules for Special Sander

1. Wear eye protection.
2. Support: workpiece with backstop or work table.
3. Maintain 1/16 inch maximum clearance between table and sanding belt or disc.
4. Hold the work: firmly. 1>0: that it may not be driven from your hands.
5. In operation, do not- press on 'the' belt. Excessive pressure: against the belt is never necessary. It will only result in damage to the belt or work piece.
6. In home where there are small children, a good practice is to unplug the motor and remove the drive belt when the sander is not in operation.
7. Feed workpiece against rotation of sander.
8. Connect to a supply: circuit protected by a circuit breaker or time-delay fuse.
9. Fasten stand or sander base to floor before using the sander.

Your Sander

1. Disc guard
2. Backstop
3. Sanding belt
4. Adjust knob
5. Work table
6. Motor
7. Table supporter
8. Stand plate
9. Knob
10. Mitre gauge
11. Sanding disc

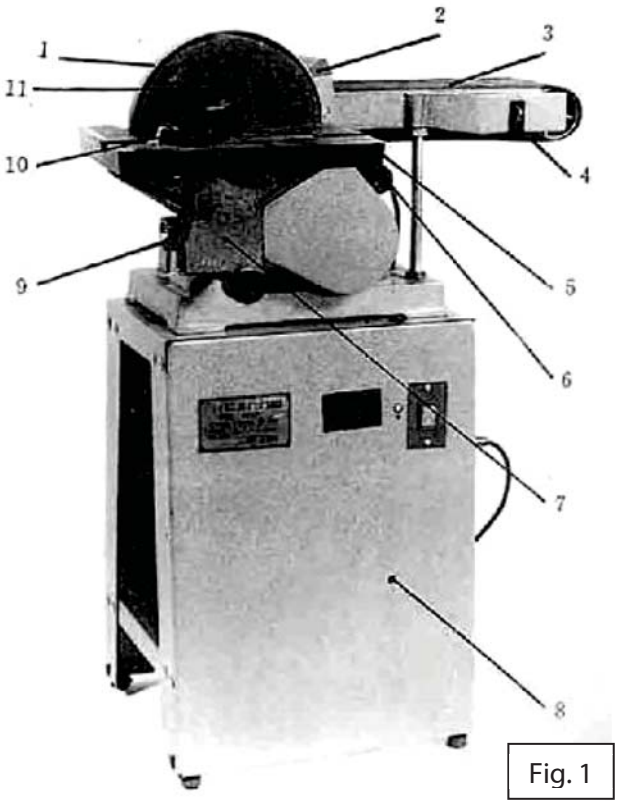

Fig. 1

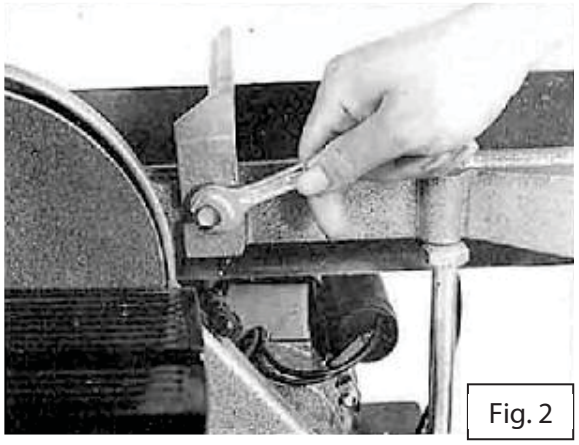
Fig. 2

Assembly of backstop

Mount the backstop on the body as shown in Fig. 2. And remember to tighten the screw. This backstop can keep you safer when grinding.

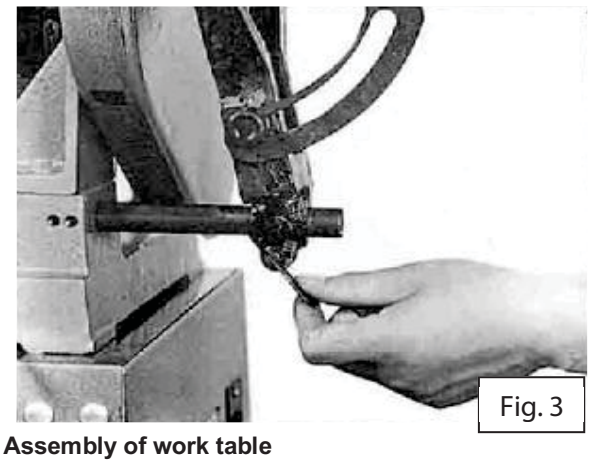
Fig. 3

Assembly of work table

Loosen the set screw as in Fig. 3. Insert the table's rod in the hole but remember to have the flat surface of the shaft facing the set screw. Tighten the set screw beware that you should have a space of 1/16″ (13mm) left in between the table and the sanding disc.

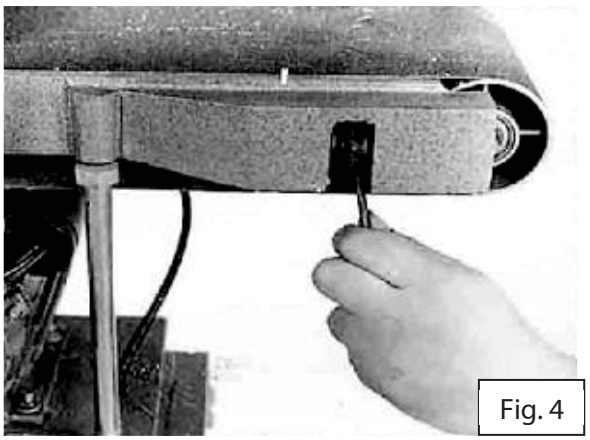
Fig. 4

Horizontal and tension adjustment of sanding belt

If you find that the sanding belt is too tight, too loose or even not align properly at the central, use the allen wrench to adjust the adjust-knob to the proper tension you require Refer-to Fig. 4.

SAVE THESE INSTRUCTIONS

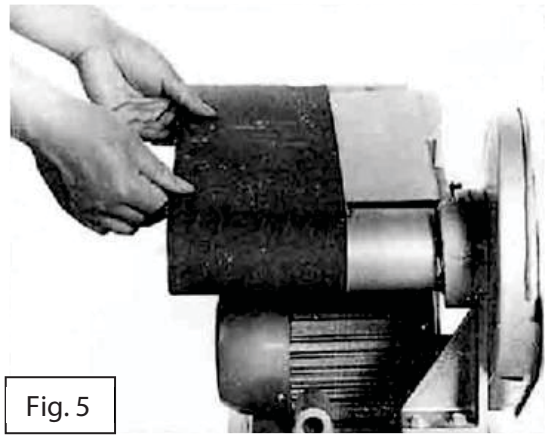

Fig. 5

Sanding belt replacement
Repeat the same procedure as in Fig. 4. Loosen the belt and take the old belt out. After replaced a new belt, make sure that the belt has its proper tension. Refer to Fig. 5.

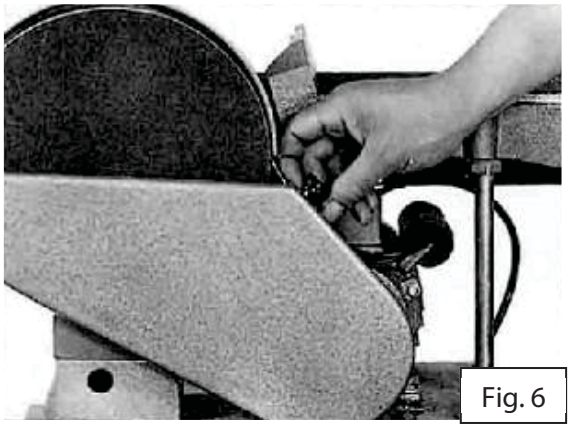

Fig. 6

Sanding disc paper and V-belt replacement
1. Loosen the knob and open the disc cover as shown in Fig. 6.

Fig. 7

2. Tear off the old sanding papers, clean off the glue remain on the disc and put on the new sanding paper as Fig.7

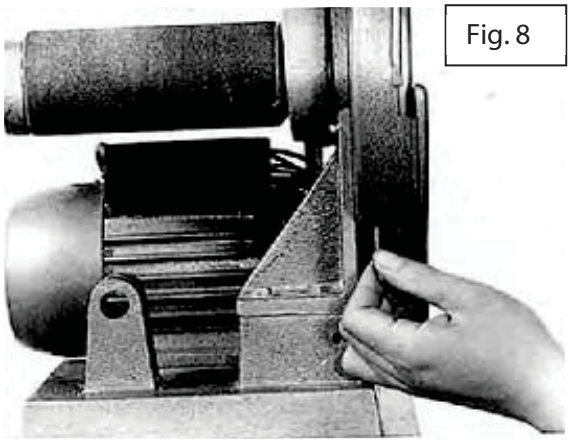

Fig. 8

3. Use the alien wrench as shown in Fig 8. insert the wrench in the rectangular window opened at the bottom of the disc cover. Loosen the set screw inside and take off the sanding disc. When you are going to put the disc back, remember that the set screw' must mount on the flatness side of the shaft and tighten.

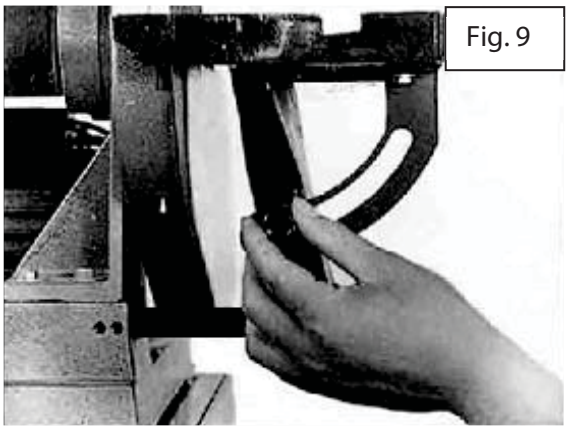

Fig. 9

Adjustment of table from 0°- 45°
Loosen the knob and adjust the table till it reach the scale you demand (varies from 0° - 45°) and tighten.

SAVE THESE INSTRUCTIONS

Operation

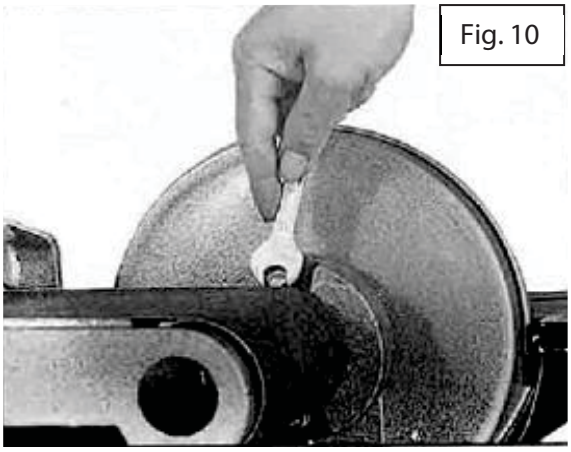

Sanding belt adjustment
Loosen the two nuts as shown in Fig. 10. (as shown in the figure you can see only one nut, another one is down below at the bottom of the disc cover, follow the arrow instruction). After you loosen the nuts, you can pull up the belt in vertical position and tighten the nuts before carry on your work.

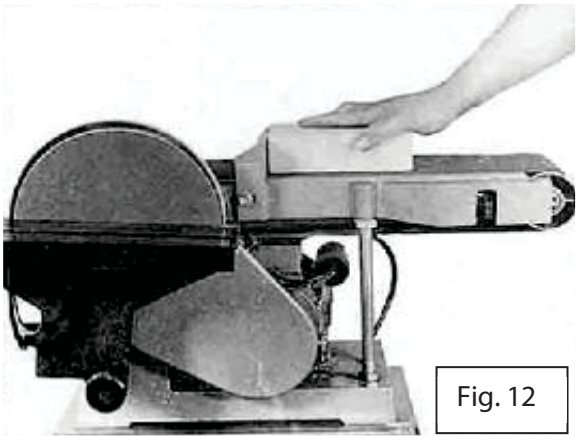

Horizontal grinding
Put your work piece on the belt and assist with the back stop to back up the work piece. When start operation, beware the safety of your hands. Do not push too hard on the work piece for the belt works better without enforcement of overdoing the job. Fig. 12.

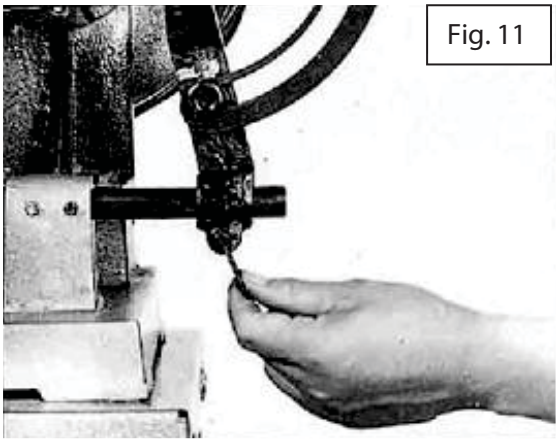

Exchanging of table position
When the belt is in vertical position, you can move the table to-the front of the belt. First of all, loosen the screw and moye to the position as in Fig. 11. Tighten the set screw but take notice on the 3mm space left in between the belt and the table.

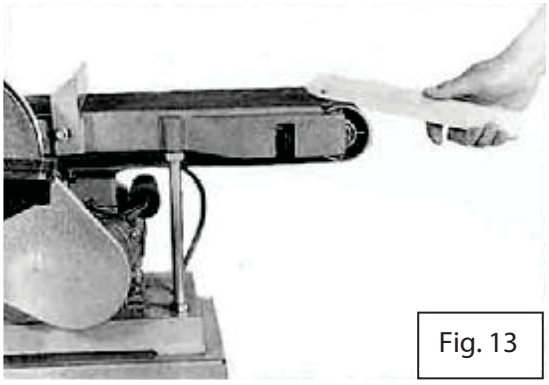

Curve grinding
Use the very end of the belt to help your curve grinding as shown in Fig. 13.

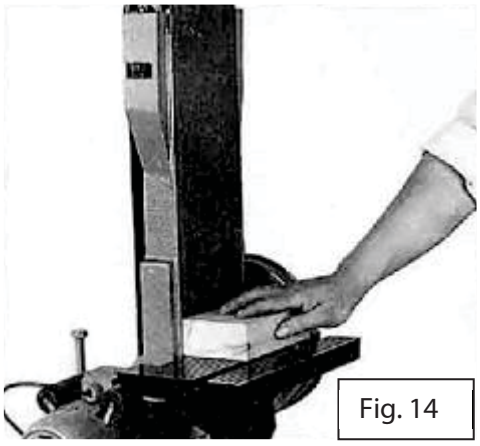
Fig. 14

Vertical grinding
When the belt is in vertical position, use the backstop to hold the work piece or you can use exchanged work table position as shown in Fig. 11 to aid your grinding. Refer to Fig. 14.

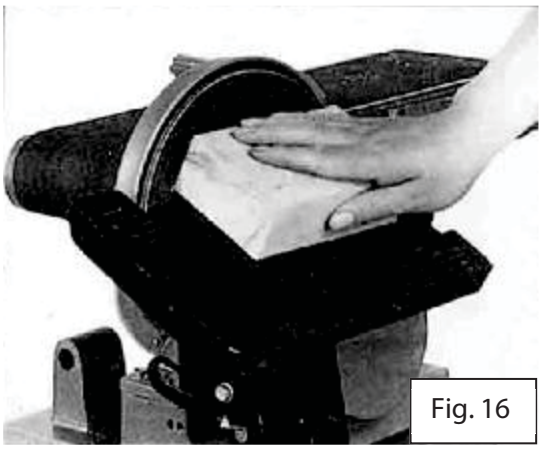
Fig. 16

Bevel grinding from 0°-45° of work table
Your work table can do bevel-grinding from 0°-45° as shown in Fig. 16. After adjustment, beware to tighten the set screw in order not to affect your security and précised grinding.

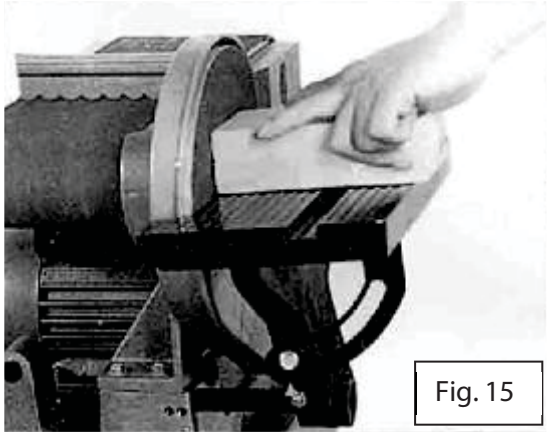
Fig. 15

Disc horizontal grinding
Put the work piece on the work table as shown in Fig. 15. And start your abrasive work straight. This is suitable for small area abrasive.

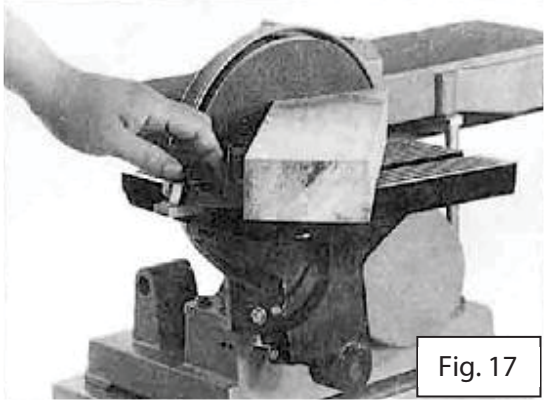
Fig. 17

Swivel grinding of 0°-60° from left to right.
Use the mitre gauge to work with the table and you can obtain angle grinding from 0°-60° as in Fig. 17. Beware to have the knob tighten after angle adjustment of the mitre gauge.

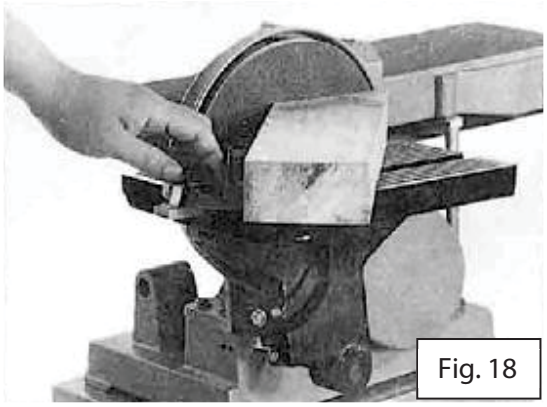

Fig. 18

Swivel grinding of 0°-60° from left to right. Use the mitre gauge to work with the table and you can obtain angle grinding from 0°-60° as in Fig. 17. Beware to have the knob tighten after angle adjustment of the mitre gauge.

Maintaining Your Belt/Disc Sander

Maintenance

To reduce the risk of injury, turn power switch "OFF" and remove plug from the power source outlet before maintaining or lubricating your sander.

GENERAL

Frequently blow out any dust that may accumulate inside the motor.

An occasional coat of paste wax on the work table will allow t he wood being cut to glide smoothly across the work surface.

CAUTION Certain cleaning agents and solvents damage plastic parts. Including: gasoline, carbon tetrachloride, chlorinated cleaning solvents, ammonia and household detergents that contain ammonia. Avoiding use of these and other types of cleaning agents minimizes the probability of damage.

WARNING To avoid shock or fire hazard, if the power cord is worn, cut or damaged in any way, have it replaced immediately.

WARNING All repairs, electrical or mechanical, should be attempted only by trained repairmen. Use only genuine replacement parts; any other may create a hazard.

Accessories

Use only recommended accessories. Follow instructions that accompany accessories. Use of improper accessories may cause hazards.

Troubleshooting

WARNING Turn switch "OFF" and always remove plug from the power source before trouble shooting.

TROUBLE: WILL NOT START

PROBLEM
1. Power cord is not plugged in.
2. Fuse or circuit breaker tripped.
3. Cord damaged.
4. Burned out switch.

REMEDY
1. Plug in.
2. Replace fuse or reset tripped circuit breaker.
3. Have cord replaced by an authorised service centre.
4. Have switch replaced by an authorised service centre

TROUBLE: DOES NOT COME UP TO SPEED

PROBLEM
1. Extension cord too light or too long.
2. Low house voltage.

REMEDY
1. Replace with adequate cord.
2. Contact your electric company.

SAVE THESE INSTRUCTIONS

Technical Data

Table size	310x155mm		Disc Size	230mm
Table Tilting	0° - 45°		Rated power input	550W
Belt Size	152x1220mm		Measurement	69x444x370mm
Belt Tilting	0°- 90°		Net. Weight	51Kgs

Wiring Data

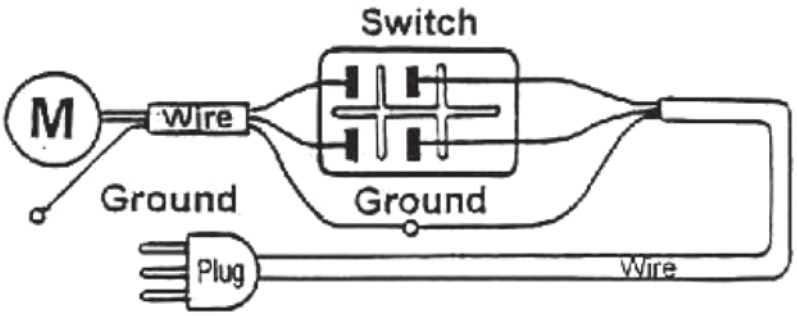

SAVE THESE INSTRUCTIONS

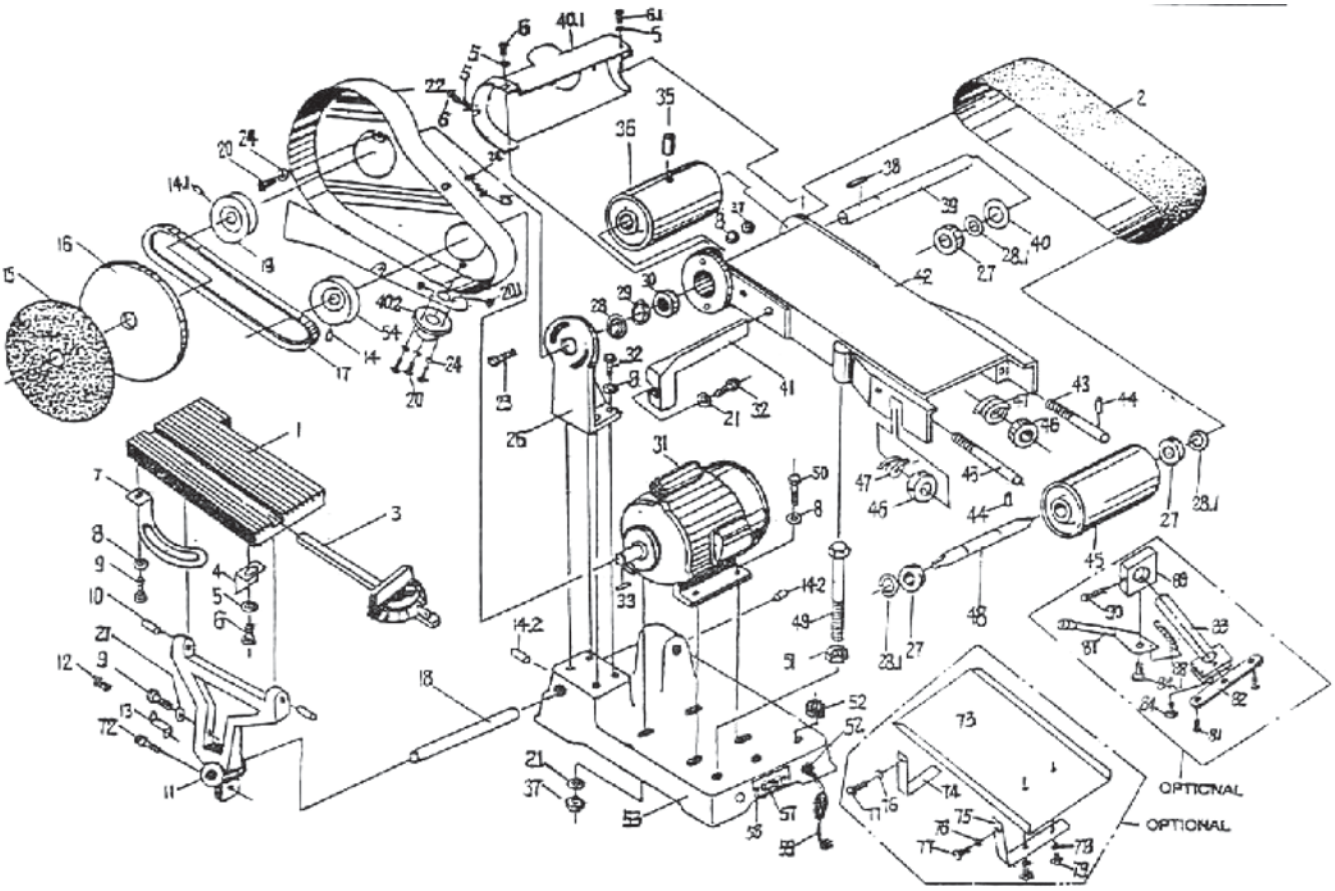

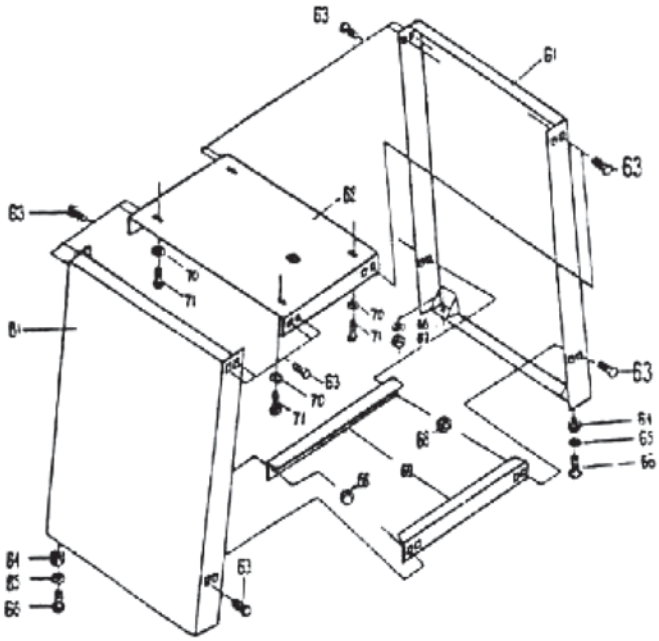

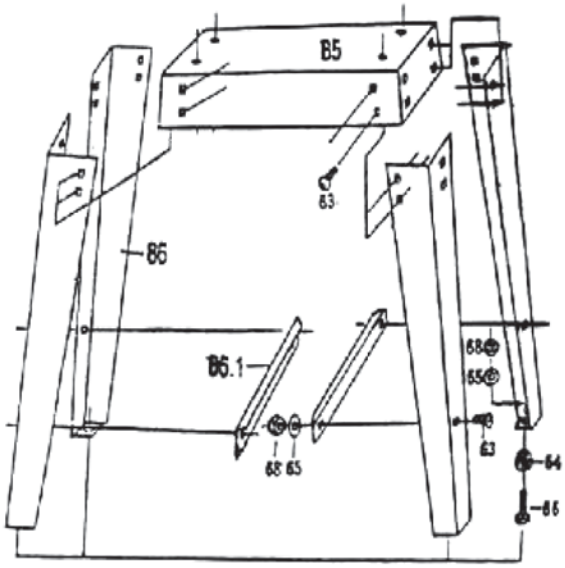

SAVE THESE INSTRUCTIONS

Parts List

Parts No.	Description	unit
1	Table	1
2	Sand belt 48"	1
3	Miter gauge	1
4	Table mount	2
5	Washer 5mm	5
6	Pan screw m5 × 12	4
6.1	Pan screw m5 × 18	1
7	Angle gauge	1
8	Washer 8mm	11
9	Screw m8 × 16	2
10	Pin	2
11	Table support bracket	1
12	Screw m5 × 6	1
13	Pointer	1
14	Set screw m6 × 6	1
14.1	Set screw m8 × 12	1
14.2	Set screw m10 × 15	2
15	Sand paper	1
16	Sand disc	1
17	V-belt A-25	1
18	Support bar	1
19	Pulley 15mm	1
20	Pan screw m6 × 12	6
21	Washer 8mm(larger)	6
22	Pulley cover	1
23	Screw m8 × 35	2
24	Washer 6mm	7
25	Knob m6 × 12	1
26	Bracket	1
27	Ball bearing 6201 Z	3
28	Retaining ring S15	1

Parts No.	Description	unit
28.1	Retaining ring S12	3
29	C-snap ring S35	1
30	Ball bearing 6202 ZZ	1
31	Motor	1
32	Screw 8 × 25	5
33	Key 5 × 5 × 20	1
35	Set screw m8 × 20	2
36	Driving roller	1
37	Nut m8	6
38	Key B5 × 30	1
39	Driving roller shaft	1
40	Rubber cover	1
40.1	Safety cover	1
40.2	Disc dust chute	1
41	Back stop	1
42	Sand belt frame	1
43	Roller adjust bar	2
44	Spring pin ϕ5	2
45	Ider roller	1
46	Adjust nut	2
47	Spring	2
48	Ider roller shaft	1
49	Support bolt m16 × 220	1
50	Screw m8 × 30	4
51	Nut m16	1
52	Cord clamp	2
53	Base	1
54	Pulley 16mm	1
57	Switch	1
58	Screw	2
59	Power cord	1

Parts No.	Description	unit
61	Stand	2
62	Stand plate	1
63	Screw m8 × 12	16
64	Rubber	4
65	Washer 8mm	8
66	Screw m8 × 25	4
67	Nut m8	4
68	Nut m8	20
69	Frame	2
70	Washer 8mm	4
71	Screw m8 × 12	4
72	Screw m8 × 20	1
73	Plate(optional)	1
74	Support(optional)	1
75	Support(optional)	1
76	Washer 8mm(optional)	2
77	Screw m8 × 12(optional)	2
78	Washer 6mm(larger)	2
79	Knob(optional)	2
81	Pan screw m6 × 16(optional)	2
82	Pull plate(optional)	1
83	Pull rod(optional)	1
84	Screw m6 × 14(optional)	1
84.1	Screw(optional)	1
87	Knob(optional)	1
88	Extension sping(optional)	1
89	Move piece(optional)	1
90	Screw m6 × 25(optional)	1

2 YEAR TRADE WARRANTY

WARRANTY INFORMATION

This warranty is provided by Total Tools (Importing) Pty Ltd of Unit 5B, 730 Lorimer Street, Port Melbourne VIC 3207. Phone: 03 9261 1900 (we, us, our).

Express Warranty

Subject to the exclusions set out below, we warrant that this product will be free from defects in materials or workmanship for 2 years from the date of purchase.

The benefits conferred by this warranty are in addition to all rights and remedies which you may be entitled to under the Australian Consumer Law, and any other statutory rights you may have under other applicable laws. This warranty does not exclude, restrict or modify any such rights or remedies.

Warranty exclusions

This express warranty does not apply where a defect or other issue with the product is caused by normal wear and tear, misuse or abuse of the product.

Consumer guarantees

Our goods come with guarantees that cannot be excluded under the Australian Consumer Law. You are entitled to a replacement or refund for a major failure and for compensation for any other reasonably foreseeable loss or damage.

You are also entitled to have the goods repaired or replaced if the goods fail to be of acceptable quality and the failure does not amount to a major failure.

Warranty claims

To make a claim under this warranty, you must bring the product along with the proof of purchase and any other documentary evidence which you think is relevant to the Total Tools' place of purchase where the claim will be handled on our behalf. Any cost incurred by you in bringing the product to the place of purchase will be borne by you.

To make a claim under this warranty, the product and proof of purchase must be returned to the Total Tools place of purchase during the warranty period specified above.

If your warranty claim is accepted, we (or the Total Tools store that handles the claim on our behalf) will, at our discretion, repair or replace the product, or refund money to you and take back the product.

SABER POWER®